# The early Roman animal cemetery in Berenike (Red Sea, Egypt): estimating its range (fieldwork in 2023–2025)

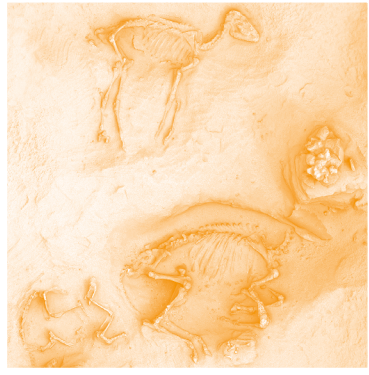

**Abstract**: Research at the companion animal cemetery in Berenike is currently focused on determining its spatial extent and the number of burials. To this end, the team has explored new sections of the northern part of the cemetery. Ongoing analyses of the material have shed light on the scale and precise chronology of the practice of burying cats, dogs, and monkeys within the Roman cultural sphere on the Egyptian Red Sea coast. In the 1st/2nd centuries CE, burials were concentrated within a radius of approximately 15–20 m of a masonry structure, tentatively interpreted as either a chapel or an open altar. Ritual practices such as the offering of sacrificial calves took place in this area in the mid-1st century. Based on the data currently available, it is estimated that a few thousand companion animals were buried in this cemetery, implying a rate of no more than 50 animals per year when the total is divided by the assumed duration of the practice, that is, about 100 years. Contextual data, as well as the discovery of exceptional glass and ceramic vessels, point to a close link between the animal burials, often involving animals imported from the Indian subcontinent, and the Roman element of Berenike society, comprising merchants, officials, and army officers.

**Keywords**: companion animals, animal burials, material culture, stratigraphy, suburban archaeology

**Piotr Osypiński**[1]
**Marta Osypińska**[2]
**Iwona Zych**[3]
**Szymon Popławski**[4]
**Katarzyna de Lellis-Danys**[5, 6]
**Renata Kucharczyk**[3]
**Magdalena Woźniak-Eusèbe**[5]

[1] Polish Academy of Sciences, Institute of Archaeology and Ethnology
[2] University of Wrocław, Institute of Archaeology
[3] Independent researcher
[4] Vienna University of Technology, Faculty of Architecture and Planning, Institute of History of Art
[5] University of Warsaw, Polish Centre of Mediterranean Archaeology
[6] National Museum in Warsaw

Polish Archaeology in the Mediterranean 35.1 | Osypiński et al. 2026: 415–444
https://doi.org/10.37343/uw.2083-537X.pam35.1.10
received 4 July 2026 | received in revised form 3 August 2026 | accepted 3 August 2026 | available online 10 November 2026
© 2026 the author(s) | This is an open access article under the CC BY license, Creative Commons Attribution 4.0 Int. (CC BY 4.0)
(https://creativecommons.org/licenses/by/4.0/legalcode)

**Acknowledgments**
The authors would like to thank the then Berenike Project Directors: Dr. Mariusz Gwiazda from the Polish Centre of Mediterranean Archaeology University of Warsaw, and Prof. Steven E. Sidebotham from the University of Delaware, who co-directed the international team with Dr. Rodney Ast from the University of Heidelberg and Dr. Olaf Kaper from Leiden University. The authors are also grateful to the Ministry of Tourism and Antiquities of Egypt for kindly granting permission to conduct the excavations, and to the representatives of the Ministry's Red Sea Office: General Director Dr. Abdelrahim Mahmoud Ahmed and Director of Foreign Missions and Excavations Mahmoud Hussein for their efforts to assure smooth and effective work at the site. This research was financed from the National Science Centre, Poland, grant UMO-2021/43/B/HS3/02749 "Non-humans in Berenike society. Archaeozoological data for a discourse on ancient identity and value", directed by Prof. Marta Osypińska.

## INTRODUCTION

The Red Sea port of Berenike is a complex, multi-phase urban site. Since 2008, it has been excavated by a Polish-American team led by the Polish Centre of Mediterranean Archaeology of the University of Warsaw (PCMA UW) and the University of Delaware (Sidebotham and Zych 2011; 2017; Sidebotham et al. 2019; 2021; 2025; Gwiazda, Zych, and Smagur 2025), with the participation of several Polish and European institutions. The investigations, carried out by an international team, have revealed town and temple architecture, water installations, and harbor infrastructure, as well as the cemeteries of the town's inhabitants.

The animal cemetery on the northwestern approach to the town is entirely unique. The part of the town space where the cemetery is located was designated primarily as an early Roman (1st–2nd century CE) rubbish dump because of the nature of the finds [*Fig. 1*]. It was only in 2011 that the animal bones, which had been noted in association with the rubbish layers during the first excavations in this area some 15 years earlier, were first recognized as bona fide burials. Since then, they have become the focus of investigations by an interdisciplinary team of specialists, including archaeologists, archaeozoologists, and veterinarians, most recently within an academic consortium of the University of Wrocław and the PCMA UW (Osypińska and Osypiński 2017; Osypiński and Osypińska 2019; Osypińska, Skibniewski, and Osypiński 2020; Osypiński et al. 2024; Osypińska, Osypiński, and Zych 2025).




Fig. 1. Site of Berenike with the location of the new trenches excavated in the area of the animal cemetery; inset, location of Berenike on the Red Sea coast of Egypt (Map processing S. Popławski)

The result is a growing body of data on the cats, dogs, and monkeys buried in this cemetery. Research has identified different types of these species, assessed their health status, and determined specific burial customs. Of equal significance is the exploration of the environmental and cultural contexts in which these animals functioned, both in life and after death.

Investigations under the most recent grant from the National Science Centre, Poland, have focused on estimating the size of the animal population in relation to the number of inhabitants at any given moment in time, as well as the overall time frame, approximately 100 years, during which animals were interred in this cemetery. The work reported in this article aimed to address these issues in a meaningful way by describing the place and role of companion animals in the urban life of the Berenike community during the early Roman period. Recent fieldwork, carried out during the 2023/2024 and 2025 winter seasons, covered the area north of previously excavated trenches within the animal cemetery.

Previous work had established the stratigraphy of the site, identifying two successive burial phases in the cemetery, intercalated with largely anthropogenic rubbish accumulated at the same time (Osypiński et al. 2024). The first burials were made atop a sand dune that had engulfed ruined structures from the Ptolemaic period. This phase was separated from the next burial phase by the construction of a shrine or open altar inside a precinct occupying the highest part of the dune. In absolute dates, the earliest phase corresponds roughly to the second quarter of the 1st century CE.

The stone structure was built around the middle of the 1st century CE. New burials were gathered close to the walls of this structure, with some isolated outliers. This second phase is dated to the second half of the 1st century CE. It corresponds to the use of this part of the early Roman town, located on the approach from the Nile Valley, for the servicing of commercial caravans engaged in the intensive global east–west trade that passed through the harbor at the peak of the early Roman period. The rubbish accumulated in this area was rich in organic materials: animal dung and bodily remains, straw, wood fragments, mats, textiles, cordage of all types, kitchen refuse, etc. The latest burials of companion animals were dug into these accumulations. However, the size of the interred animal population, and that of the living animals by extrapolation, could not be estimated without knowing the extent of the burial ground in the two phases. The number of animal burials previously identified was 585, found in an area of slightly more than 100 $m^2$ (Osypińska, Skibniewski, and Osypiński 2020).

The burial tradition ceased once the stone enclosure was dismantled and leveled to the ground. This evident and definitive termination of burial customs was most likely linked to a major demographic shift and clear changes in the urban arrangement, which occurred in Berenike after the early 3rd century CE. This was most likely due to the withdrawal of the imperial Roman legionary troops, which were replaced for a brief period by auxiliary units of Near Eastern origin (there is epigraphic evidence

of an *ala* of Palmyrene archers present at the site in the early 3rd century CE; see Sidebotham 2011: 65–66). The current investigations were also designed to determine whether the late burial phase at the cemetery lasted through the end of this period, that is, until the end of the 2nd century CE.

## METHODOLOGY

Standard excavation methodology was applied, retaining the same approach and techniques used in the earlier stages of the investigation to ensure continuity of recording. Square trenches (5 m × 5 m) established within the existing site grid were aligned so as to create a continuous vertical stratigraphic record extending northward.

Drawing upon experience from previous excavations and the well-established general knowledge of stratigraphic relations in this area, the accumulated fill was excavated in arbitrary levels, each 10–20 cm thick. The excavated fill was fully sieved using 2-mm sieves. The burials were carefully cleaned and recorded *in situ*; they were then excavated individually using small archaeological tools. Features such as burials and pits with distinctive fill were recorded photogrammetrically (3D) using a total station and digital cameras. Additionally, selected groups of features were documented with a 3D Artec Eva® scanner.

Archaeological finds from the trenches were recorded in a database consistent with the Berenike Project site standard. The finds were classified by category and passed on to the respective specialists. Field conservation was carried out selectively wherever deemed necessary. Key categories were studied on site (the remaining categories will be examined in the future). Organic finds included animal bone and plant remains, malacological finds, natural and fragmented worked wood, and more or less lumpy bits of charcoal. The animal remains, of particular significance in the context of the Berenike Animal Cemetery, will be discussed in a separate publication. Taxonomic identification and zooarchaeological analyses followed the protocols described previously (Osypińska, Skibniewski, and Osypiński 2020; Osypińska, Osypiński, and Zych 2025). Artifacts include pottery, stone and metal objects, textiles, basketry, matting, leather, written sources (ostraca and papyri), coins, oil lamps, body ornaments found with the burials, as well as some apparently architectural and furnishing elements.

## RESULTS

As a preliminary overview of the new evidence for the extent of the animal cemetery, the following presentation of the excavation results naturally has its limitations. Only aspects most relevant to this issue are presented, including a preliminary assessment of the newly discovered animal burials and a few selected categories of artifacts. The final publication will necessarily include all finds.

The presentation focuses on the two trenches that were excavated down to the culturally sterile sand layers. The findings from the three trenches (only the uppermost levels of Trench BE-178) are presented jointly, divided by phase, in accordance with the established phasing of the animal cemetery. The emphasis is on evidence that verifies and confirms the currently accepted dates of these phases.

## THE EXCAVATION

Two consecutive fieldwork seasons in the winter of 2023/2024 were dedicated to the exploration of Trench BE-161. Trench BE-171 was laid out in the final days of the 2024 season, although little beyond the surface layer was documented at the time. The trench was fully excavated in the winter of 2025. Trench BE25-178 was smaller than the standard size (4.50 m north–south × 2.50 m east–west) and was excavated in the winter of 2025.[1] The specific aim of excavating the uppermost 25 cm of deposits was to check for any continuation of the relatively large fragments of papyrus documents found in the two adjacent trenches.

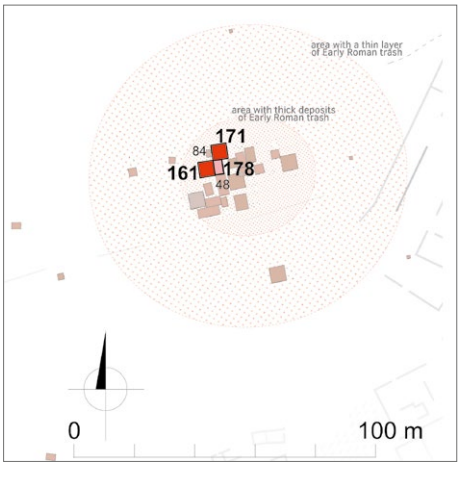


Fig. 2. Location of Trenches BE-161, BE-171, and BE-178, excavated in 2023–2025 within the northern suburban area, in the middle of the early Roman rubbish dump (marked in red/pink) (Map S. Popławski)

The location of the trenches within the site grid was designed to extend the longitudinal and latitudinal sections through the cemetery established in previous research. Trench BE-161 was tangent at its southeastern corner to Trench BE01/18-48 in a way that extended the northern section of Trench BE-48 by 5 m westward and its western section by 5 m northward [*Fig. 2*]. Excavation of Trench BE-171 extended the north–south section another 5 m northward, aligned with the western trench wall of BE-161, and 5 m eastward, aligned with the northern trench wall of BE-161. BE-178 will be considered once it is fully excavated.

An orthophotographic record was made of all four trench walls of the two trenches. Stratigraphic units were distinguished and interpreted based on current knowledge of the site's history, as explained in the introduction, and assigned chronological dates [*Figs 3, 4; Table 1*].

1 Trenches BE-161 and BE-171 were excavated by Piotr Osypiński; excavations in Trench BE-178 were supervised by Anance Minneboo.

Table 1. Synchronized layers (loci) in trenches excavated in 2024–2025 (excluding loci assigned to individual animal burials; * indicates votive/offering deposits)

| Description and tentative chronology | BE-161 | BE-171 | BE-178 | Chronologically diagnostic small finds |
|---|---|---|---|---|
| Modern surface, with deflated and displaced items | 001 | 001 | 001 | Redeposited finds: coins (e.g. tetradrachm of Hadrian (134–135 CE) from the surface directly east of BE-161) |
| Water/wind erosion postdating the animal cemetery | | 003 | | Redeposited finds: terra sigillata (30–80 CE) |
| Sediment postdating the animal cemetery (2nd–3rd centuries CE) | 002a, 002b | 009?, 015? | 008, 009 | Redeposited finds: papyri (letter, 79–81 CE?); latest terra sigillata (40–80 CE); Eastern Sigillata (25–50 CE) |
| Late phase of the animal cemetery/ caravan-service deposits, dated to the late 1st century CE | 002c, 011, 026 | 002a, 002b, 013, 020, 021*, 023* | 002, 003 | Finds: papyri (47/48, 61/62 or 104/105 CE), ostraca (66/67 CE?), the latest terra sigillata (40–80 CE); Egyptian amphorae AE3b (Hadrianic and later); complete frog lamp |
| Spatial reorganization and construction activities dated to the 50s/60s CE | 023, 027, 028, 029, 177*, 179* | 014, 019, 025a, 025b, 026 | Not excavated | Finds: Aucissa brooch, coin (Caligula), ostraca (including Petronius' letter), the latest terra sigillata (25–75 CE and 10–60/70 CE); terra nigra; Egyptian amphorae AE3a (Neronian–Trajanic); 1st-century CE molded-glass figural bottle; complete and fragmentary early 1st-century clay oil lamps (frog and imported types) |
| Early phase of the animal cemetery/ caravan service? predating the 50s CE | 050 | 027 | Not excavated | Finds: coin (Claudius) |
| | 038, 038a | 028, 028a | Not excavated | Finds: terra sigillata (e.g. 15 BCE–15 CE); Egyptian amphorae AE3a (late Augustan–Tiberian) |

## PRE-CEMETERY PHASE

Prior to the establishment of the animal cemetery, the site surface consisted of sand (Loci BE24-161/038 and BE25-171/028; [see *Table 1*]) that had accumulated over the remains of modest masonry architecture and rubbish dated to the later Ptolemaic period (for the earliest remains, see the results of previous investigations in the area: Osypiński et al. 2024).

## FIRST BURIAL PHASE

The first animal burials were dug into the sandy dune surface, which was exposed in Trenches BE-161 and BE-171 at 3.50 m a.s.l. [*Fig. 5*; see *Figs 3, 4*: Loci 038 and 028, respectively]. The excavated surface in BE-161 was densely covered with graves, while only a few were found in the corresponding level in BE-171. In both trenches, the burials were absent from a clay surface, the edges of which appeared in

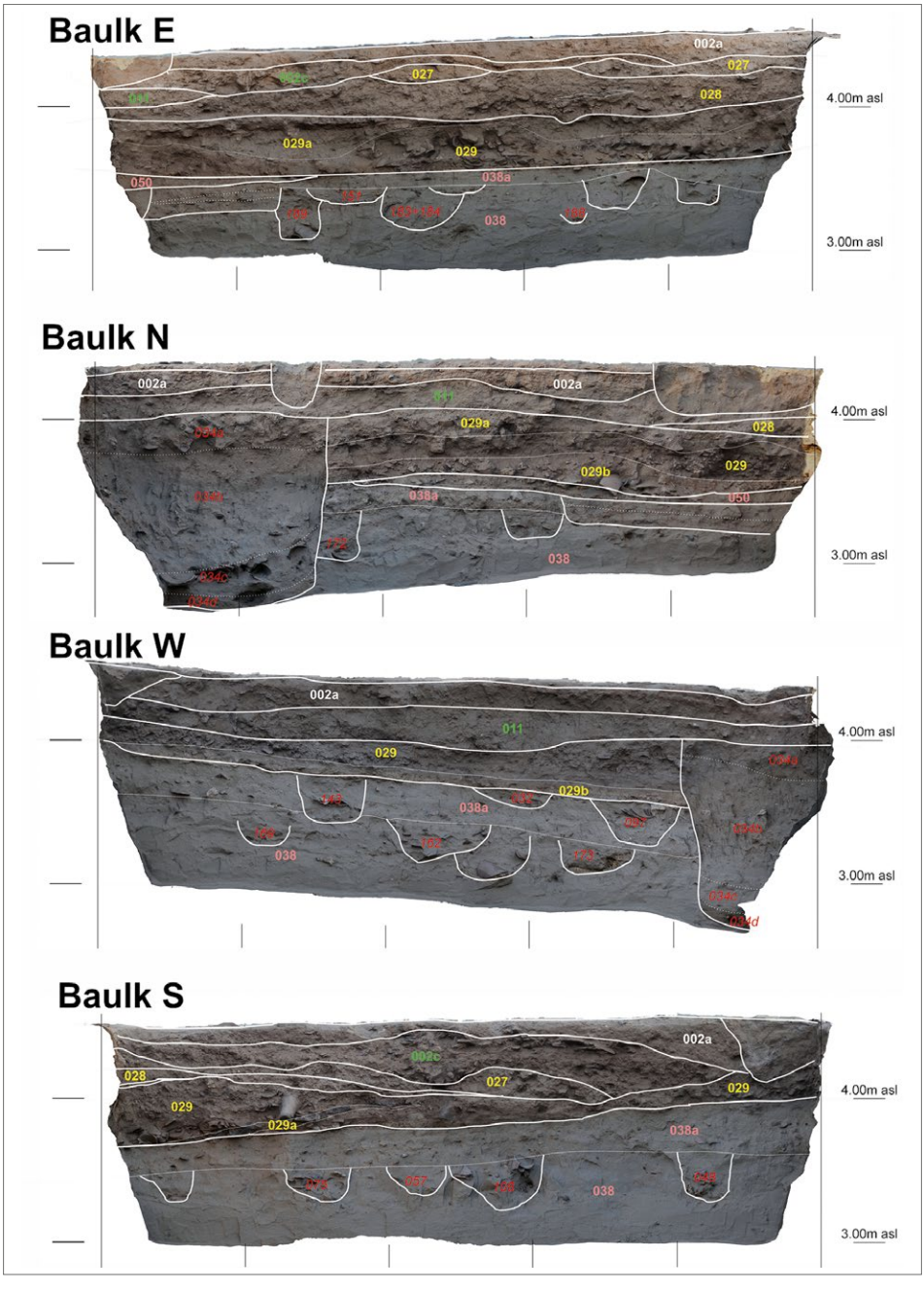


Fig. 3. BE23/24-161: stratigraphic interpretation of the four trench walls based on orthophotographic images. Color-coded loci: red – burials; pink – layers dated before the mid-1st century CE; yellow – leveling and construction levels; green – occupational layers from the second half of the 1st century CE; white – layers postdating the animal burial phase (Photos and processing S. Popławski, P. Osypiński)

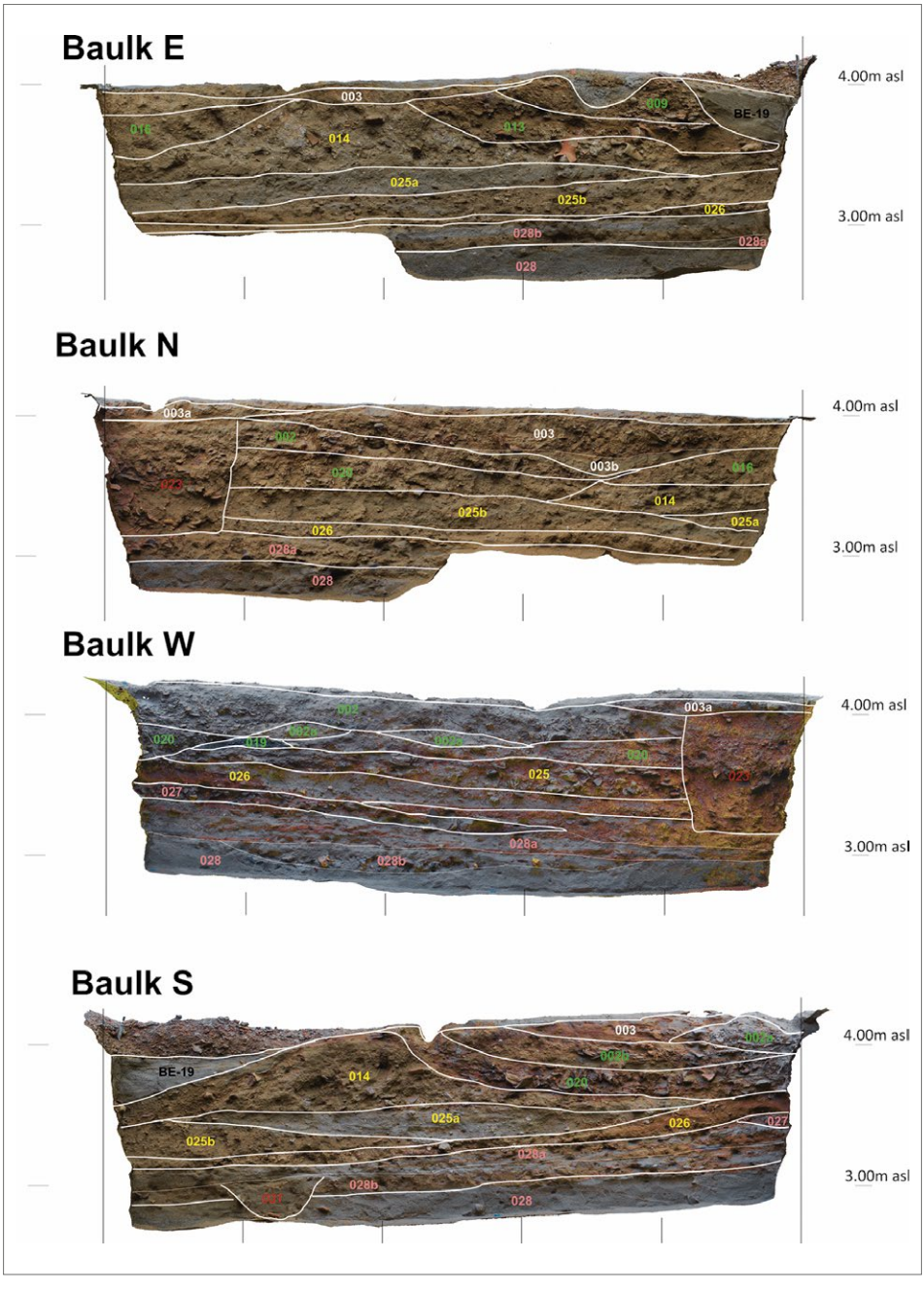


Fig. 4. BE24/25-171: stratigraphic interpretation of the four trench walls based on orthophotographic images. Color-coded loci: red – burials; pink – layers dated before the mid-1st century CE; yellow – leveling and construction levels; green – occupational layers from the second half of the 1st century CE; white – layers postdating the animal burial phase (Photos and processing S. Popławski, P. Osypiński)

the northeastern corner of BE-161 and the southwestern corner of BE-171 (Locus BE-161/050=BE-171/027). This surface consisted of a series of laminated layers of occupational origin, suggesting the remains of some kind of chambered structure that, although probably utilitarian, may have been quite ephemeral. A coin of Claudius, minted in 41–42 CE and found in this context, provides a *terminus post quem* for the use of this surface.[2]

Altogether 136 burials were excavated from this phase in Trench BE-161, compared to just seven in the corresponding

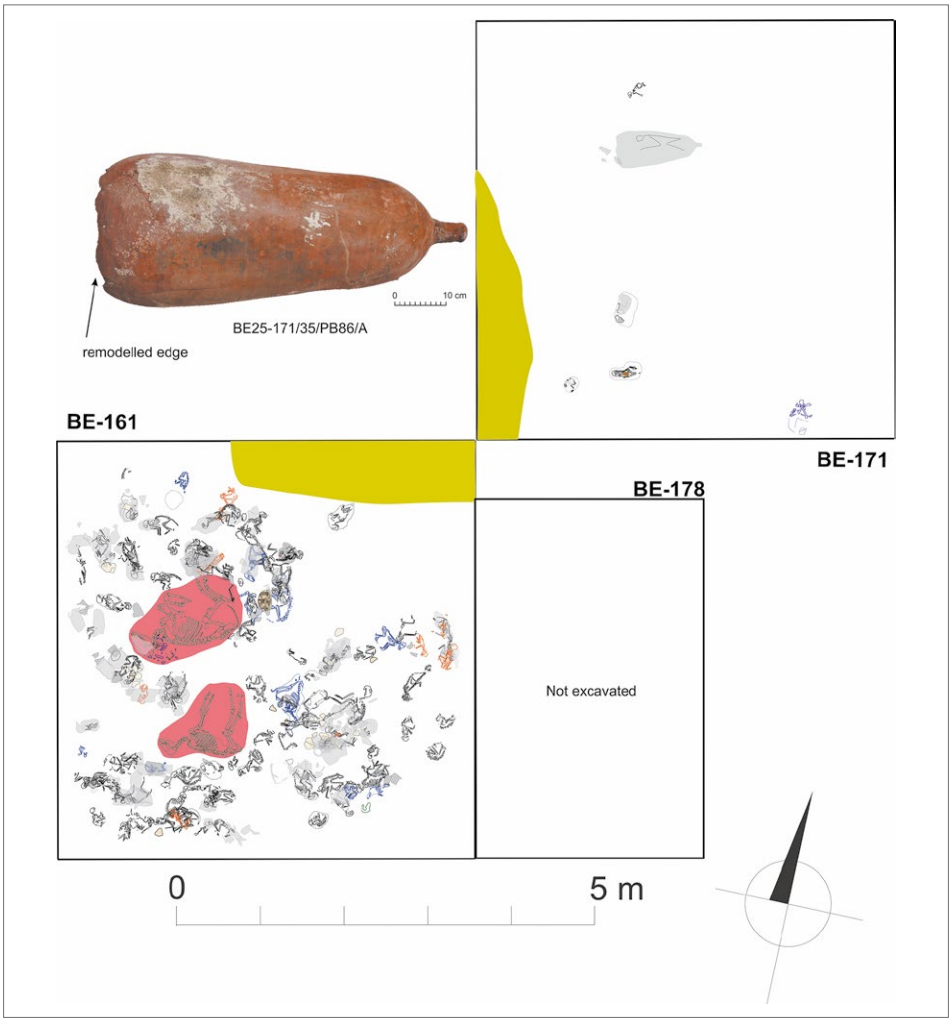


Fig. 5. Distribution of animal burials belonging to the first phase of the cemetery; the grave pits respected the edges of a clay surface (marked in yellow). Shaded in red are two offering deposits with calves from the mid-1st century CE. Inset photo: Egyptian Amphora AE3 reused as a burial casket for an adult cat (Photo and processing P. Osypiński, K. de Lellis-Danys)

2 BE25-171/027/003. Identification, S.E. Sidebotham, personal communication.

phase in Trench BE-171. The low burial density in the latter trench, in an area beyond the clay surface described above, suggests that this area represented the northern outskirts of the cemetery.

The graves appear to have been clustered together. However, the original arrangement was severely disturbed by the deep burial pits from the second phase of the cemetery, including a monkey burial in the northwestern corner and two pits containing calf offerings in the western part of Trench BE-161 [see *Fig. 5*].

The buried animals were occasionally wrapped in textiles or mats and sometimes furnished with distinct superstructures made primarily of large fragments of broken transport pottery. For instance, an adult cat was buried in an unbroken Egyptian amphora AE3, the neck and rim of which were carefully chipped away to use the body of the vessel as a burial casket (Locus BE-171/035) [see *Fig. 5*]. The sherds used for this purpose reflect the repertoire of vessel and ware types found in the surrounding trash deposits, suggesting that they were readily collected from the litter scattered across the urban periphery. Apart from some residual fragments of vessels from the Ptolemaic period, the main vessel type used for the burials was the Egyptian amphora AE3a [*Fig. 6:1*] dating from the Augustan and Tiberian periods; none of the vessels recorded in these excavations is of later date (Tomber 2007: 528, Fig. 1).

Other pottery finds from the Roman trash represent a geographically diverse range of wares and vessels from across the Mediterranean, including present-day Italy, Spain, and France in the west, and the Near East, southern Arabia, and even India in the east. Kegs from the Western Desert, used to package some goods delivered to Berenike, are also present, as is Italic terra sigillata, the fine tableware of the period [*Fig. 6:2*]. The pottery assemblage reflects a repertoire already attested at Berenike and other sites in the Eastern Desert (Tomber 2012).

Fragments of clay oil lamps recovered from this assemblage represent types (where identifiable) that were either imported from outside Egypt or produced in ateliers of Alexandria or the Nile Valley (Młynarczyk 1998). They were most

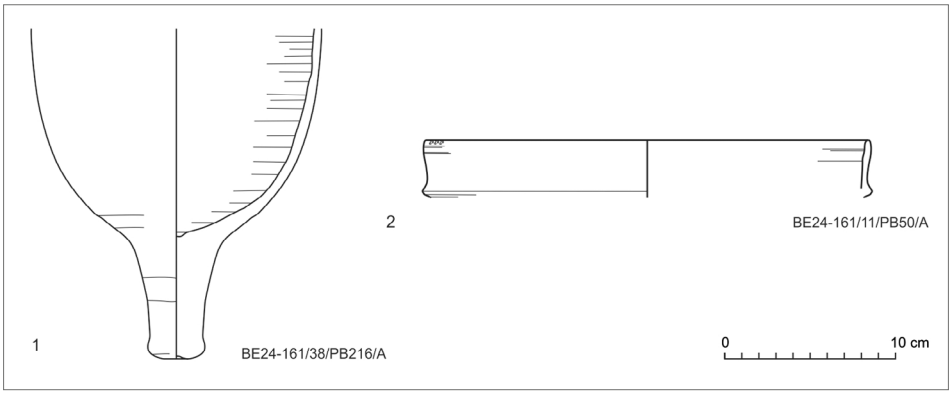


Fig. 6. Examples of pottery from the early Roman rubbish: 1 – an Egyptian amphora AE3a and 2 – a terra sigillata dish of the Consp. 20 type (Drawing K. de Lellis-Danys)

likely intended for private rather than funerary use. Importantly, the ubiquitous evidence of burnt nozzle tips indicates that the lamps were used before being discarded.

No body ornaments or grave goods were found in any of the early burials.

The list of taxa identified in this early cemetery phase includes cats (about 90% of all burials), dogs, and monkeys. The monkeys, which were mostly imported from the Indian subcontinent, constituted more than 5% of all animals, an exceptionally high proportion compared with results from other parts of the cemetery excavated to date, where the share did not exceed 1% (e.g. Osypińska, Skibniewski, and Osypiński 2020). This suggests that the area currently under exploration was dedicated to animals, including primates, whose status may have been higher than that of others. The dogs buried in this area were also distinguished by varied morphology, including, among others, a small animal of the dachshund type.




Fig. 7. Skeletons of two calves: BE-161/177 (center) and BE-161/179 (top), buried as votive offerings. At bottom left, burials of dogs and a cat from the early cemetery phase; at center right, next to the head of BE-161/177, stones blocking the burial pit of a cat from the late cemetery phase (Top view of photogrammetric model by S. Popławski)

## CONSTRUCTION PHASE

The leveling layer under buildings dating to the mid-1st century CE, identified in previous research (Osypiński et al. 2024), appears to have extended much farther than originally hypothesized, reaching at least 17 m north of the central stone enclosure located in Trenches BE-132, BE-134, and BE-80. In BE-161, it appears as Locus 029 (=023=027=028; [see *Table 1*]), becoming only slightly thinner northward and reaching a thickness of approximately 30 cm. In BE-171, it continues as leveling layers BE-171/026, 025a, 025b. It was likely a single, intentional deposition containing numerous ceramic and organic remains, most likely collected near the construction area. Importantly, this deposit was apparently not disturbed by any of the later animal burials.

The clay surface observed on top of this layer in Trench BE-107 (Osypiński et al. 2024: Fig. 3), and associated with the walls of the central stone enclosure, does not extend this far north.

The artifact assemblage of the rubbish used as leveling comprises a wide range of small finds and coins that predate the construction of the enclosure in the animal cemetery. One of the finds in question is a bronze Roman fibula (Aucissa type), presumed to originate from a legionary context and dated to the later part of the first half of the 1st century CE (Osypiński

et al. 2025). Numerous iron spike nails (up to 9 cm long) are present in these accumulations. There is also an abundance of fragmentary ostraca, which are currently under study. Individual bones of camels and donkeys were also found, some bearing chopping and filleting marks, alongside almost complete skulls of these animals.

Two calves (Nos BE-161/177 and BE-161/179) were buried as votive offerings in a level preceding the deposition of leveling layer 029, but in direct association with the construction phase. They were placed close to one another, both lying on their left side with their heads facing west. The front part of the head of one of the calves (BE-161/177) was found smeared with ocher and covered with a large pottery sherd [*Fig. 7*].

The leveling layer BE-161/029 also contained abundant discarded pottery, representing a rich repertoire of vessels originating from various parts of the Roman Empire and beyond, tentatively dated to around the mid-1st century CE on the basis of parallels from Mons Claudianus (Tomber 2006). The predominance of vessels imported from the Nile Valley, comparable to those found in other trash deposits at Berenike (Popławski et al. 2021: 403–404), suggests that the supply network was well organized within the province. Campanian Dressel 2–4 containers and Italic terra sigillata bowls [*Fig. 8:4*] indicate that the inhabitants of Berenike also relied on commodities and serving vessels brought from the heart of the Roman Empire. The diversity of the pottery assemblage is reflected in the variety of other wares, such as Gaulish terra nigra [*Fig. 8:1*], Egyptian faience and ceramic bowls from the Mareotis region [*Figs 8:2, 3, 5*] and Aswan [*Fig. 8:6*], as well as cooking pots from India [*Fig. 8:7*]. The repertoire

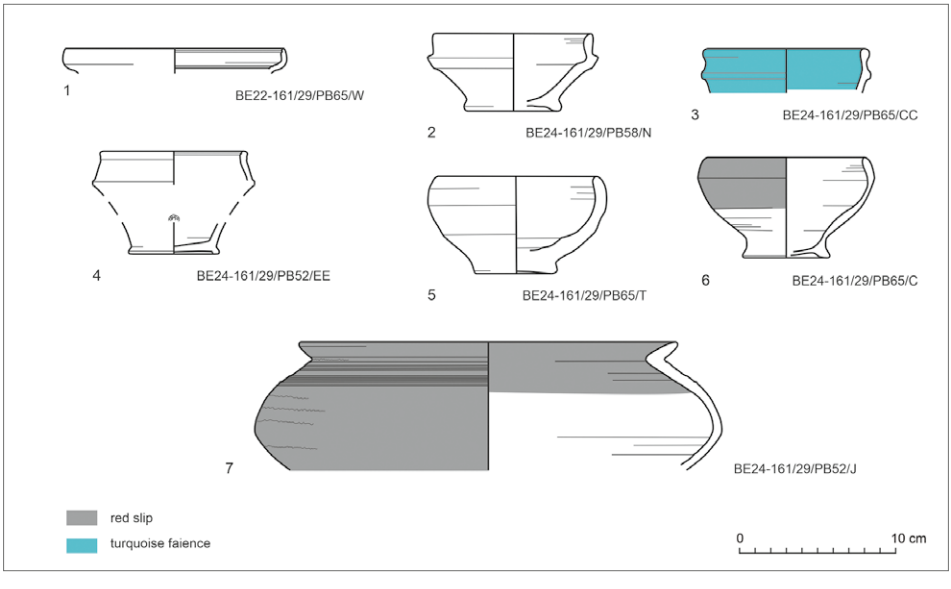


Fig. 8. Selection of pottery wares from Locus BE-161/029, bowls: 1 – terra nigra; 2, 5 – Mareotic; 3 – faience; 4 – terra sigillata; 6 – Aswan; 7 – Indian cooking pot (Drawing K. de Lellis-Danys)

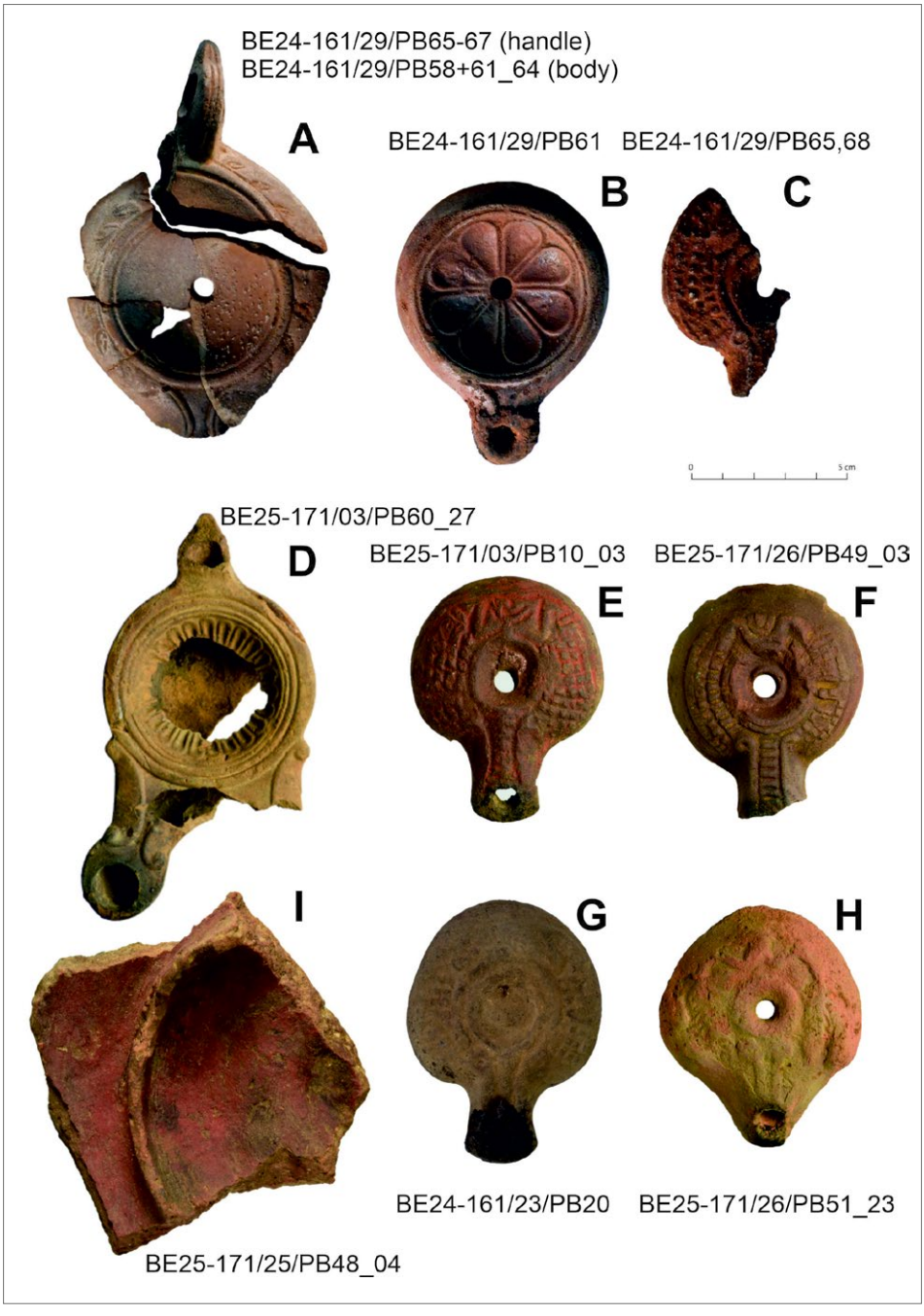


Fig. 9. Clay oil lamps from the construction phase. A – Bailey Type C/Loeschcke Type V; B – Mediterranean-type lamp; C – Egyptian Neo-Hellenistic lamp fragment, Knowles Type A; D – Broneer Type XXI dilychnos; E, F, G, and H – Egyptian Neo-Hellenistic lamps, Knowles Type A and B, I – Indian bowl-shaped lamp (Photos, processing, plate I. Zych, P. Osypiński)

found in corresponding contexts in Trench BE-171 was very similar, with the ceramics representing a full range of imports from India as well as from the imperial provinces of Europe. Fine wares included examples of Italic terra sigillata and terra nigra, and barbotine vases.

The fairly large assemblage of fragmented clay oil lamps included complete or almost complete pieces [*Fig. 9*]. A circular handleless lamp with a rosette of four bilobate leaves on a shallow discus can be dated with reasonable precision [*Fig. 9:A*]. It has two shoulder volutes, which place it in the second half of the 1st century CE, perhaps in the late 60s or 70s, that is, around the Flavian period. A very close parallel comes from Cyprus (Bailey 1988: Q2454, Pl. 66, with references); it also bears a base mark, although different from the small cross-shaped sign that appears on the base of this lamp. Our lamp is more likely to have come from one of the lamp-producing centers in the eastern Mediterranean rather than from Italy, because Italian examples, which can be a few decades earlier, usually have full volutes on the nozzle and are furnished with handles. The other lamp, which was broken into pieces, has a large, plain, shallow discus and shoulders decorated with impressed leaves [*Fig. 9:B*]. The shape of the pierced handle suggests an Alexandrian product, but otherwise parallels have yet to be found. Egyptian Neo-Hellenistic molded lamps are represented here by one fragment [*Fig. 9:C*]. This category was likely a development of the earlier 2nd- and 1st-century BCE Egyptian lamps, and in the early Roman assemblage, frog-related motifs were a common, if not the only, form of iconographic decoration found on them. Our lamp is akin to Type A finds from the excavations at Mons Claudianus, which enabled the dating of this form to be extended back with confidence to the late 1st/early 2nd century CE (Knowles 2006: 323, with discussion of typology and chronology). The stratigraphic context at Berenike helps to push this date back by 20 or 30 years, to around the middle of the 1st century CE.

Among the Mediterranean types, the most notable is a large twin-nozzle volute lamp that once featured a decorative attachment on top of the pierced handle [*Fig. 9:D*]. The discus is decorated with a 24-petal rosette. The type, Broneer XXI, is widespread in the 1st century CE (e.g. Bailey 1980: Q1003 Pl. 28). Dilychnos lamps were produced in Italy as well as in other Mediterranean centers such as Cnidus and Ephesus. It can be dated more precisely through an analysis of the shoulder and volute forms in combination with the fabric. More importantly, as discussed above, this context contributes to extending the chronology of the Neo-Hellenistic lamps decorated with frog-related motifs back to an earlier date. The ornament and fabric are so distinctive that even small fragments of the shoulder and body can be assigned, at least generally, to Knowles' Type A or B. There is one complete example of a lamp and three tops, which are characteristically disengaged from the lower parts of the lamp at the seam [*Fig. 9:E, F, G, H*]. Interestingly, while strikingly similar at first glance, three of these four examples differ in the details of the decorative motif. The Mons Claudianus lamps of Type A are dated to the late 1st century CE at the earliest (Trajanic), which corresponds to the beginnings of

the quarry site. The context in Berenike pushes this dating back by at least three or perhaps four decades, supporting Petrie's mid-1st century CE dating for some examples from Memphis (cited in Knowles 2006: 323). These lamps also demonstrate the ubiquity and long-lasting nature of the ornamental motif, considering that



Fig. 10. Writing tools and a selection of ostraca from Locus BE-161/023 (PCMA UW | photos K. Braulińska (top), P. Osypiński)

close formal parallels are usually dated to the 3rd–4th century CE (Bailey 1988; Chrzanovski 2019). The fourth frog lamp is a variant of Knowles' Type B, probably close to the example from Bouvier's collection, but from a much-worn mold, with two palm leaves on the shoulder and two semi-volutes on the nozzle (Chrzanovski 2019: Type IX.3.2, No. 492, dated to the 3rd or 4th century CE). Last but not least, the assemblage included an example of an Indian bowl-shaped lamp [*Fig. 9:I*] of the same type as an almost complete example found just a dozen meters farther south, in Trench BE-48 (Wheeler, Ghosh, and Deva 1946: Type 38).

Associated with this construction phase is a layer containing numerous lumps of light-brown clay and rock debris, including local gypsum and fossil coral heads, as well as numerous large iron spike nails (Loci BE-161/023=027). It yielded a rich set of ostraca, nearly 30 fragments, alongside writing tools, such as a ceramic inkwell, wooden styli, and a fragment of a wooden wax tablet [*Fig. 10*]. These tools of a scribe or accountant could suggest the presence of a developed bureaucracy responsible, if not for the construction effort as such, then for the caravan stop hypothesized to have operated on the northern outskirts of the city (Osypiński et al. 2024).

A dump of building materials, such as coral-head debris and clay, as well as fragments of floor paving slabs, was found in Trench BE-171 (Locus BE-171/014). The dump formed a bank oriented more or less north–south. The locus also yielded numerous amphora necks deliberately cut from the vessels. These could have been waste from the production of ceramic caskets for burying dead animals (for example, the pottery case for the burial in Locus BE-171/035 mentioned above). Alternatively, cut-off amphora necks could have been used as ceramic building material for the construction of water pipelines. Infrastructure of this kind from a similar period is known from the area around the Hellenistic baths and the Hellenistic–Roman cistern (see Zych et al. 2016: 323 and Fig. 3).

It should be emphasized that no animal burials were associated with the construction layers. In only a few cases, the very deep burial pits from the late cemetery phase cut through them (e.g. Locus BE-161/034).

## SECOND BURIAL PHASE AND RUBBISH DEPOSITION

The second cemetery phase, which was contemporary with the operation of the caravan stop in this part of the town, is characterized by accumulated organic rubbish (Loci BE-161/002c, 026, and the sandier Locus BE-161/011, corresponding to Loci BE-171/002a and b, 013, 020, and BE-178/002, 003). This is consistent with what was found in the previously explored parts of the cemetery (Osypiński et al. 2024).

The first layer postdating the construction of the masonry enclosure located a few meters further south (see Osypiński et al. 2024) was a rubbish deposit (Locus BE-161/020), which was also found on either side of the dump of building debris 014 from the previous phase (coded Locus 013 on the eastern side of this dump). It contained large quantities of potsherds from amphorae and other vessels representing a highly

varied coarse and fine repertoire, as well as broken pieces of worked wood, mollusk and snail shells, and numerous small artifacts, such as coins and ostraca (currently under study). The pottery is dated to the 1st and early 2nd centuries CE, with a similar geographical range as before, encompassing the Mediterranean, Egypt, and the Near East, as well as South Arabia and India. Fine wares, including terra sigillata, faience, and glazed vessels, are represented in abundance. The most common are Italic terra sigillata dishes of the Consp. 20 type [see *Fig. 6:2*], which provide a good chronological framework for these deposits. While traditionally associated with the Claudian/Neronian periods, some of these dishes are Neronian/Flavian in date (Ettlinger et al. 1990: 86).

The lamp assemblage from this phase is much less abundant and severely fragmented. However, the range does not differ significantly, with a broken Indian bowl-shaped lamp found alongside fragmented Mediterranean ("imported") and local Alexandrian lamps, as well as a rich assemblage of Egyptian Neo-Hellenistic lamps with frog-related motifs.




Fig. 11. Exceptional late-1st-century CE glass finds from rubbish deposits associated with the late phase of animal burials: top, Ethnic Head cup fragment (Inv. No. BE25-171/002/058), shown here with a parallel from the Metropolitan Museum of Art Object No. 81.10.226 (inset); bottom, enameled bowl with a fish motif (Inv. No. BE25-171/020/014) (Photos R. Kucharczyk)

This rubbish deposit corresponded to the sand and organic laminae containing fragmented pottery, post-consumption bone remains, mollusk shells, pieces of wood, matting, basketry, and ropes found in Trenches BE-171 (Loci 002a=002b=009=019) and BE-178. However, there were some exceptional finds, such as the handle of a Campanian Dressel 2–4 amphora bearing the stamp EX FIGLIN CAESARIS (Inv. No. BE25-171/002/052) [*Fig. 11*, inset]. Analogous amphorae and stamps are known from imperial workshops located in Italy, as indicated, for example, by finds from Ostia (Manacorda 2007).

Another exceptional find is a head-shaped cup, referred to in the literature as the Ethnic Head cup type (Isings 1957: Form 78a) (Inv. No. BE25-171/002/058) [*Fig. 11*, top]. This is a vessel of transparent, colorless glass with a greenish tinge. The preserved fragment shows the back of a head and the bottom of the right ear and right cheek. The hair is indicated by six horizontal rows of short vertical locks in relief, ending in a straight line at the nape of the neck. A comparison with intact vessels of this kind, such as the example from the Metropolitan Museum of Art, which is dated, like other cups of this type, to the 1st–2nd centuries CE, suggests that this fragment was part of a vessel shaped like a male head, possibly with African affinities. The find from Berenike is the only example of this type of glass known from Egypt. The few dated finds with secure provenance come from the western provinces of the Roman Empire, including Herculaneum and Pompeii (not later than 79 CE), and two sites in Wales, Caerleon and Caersws, where they were assigned to the Flavian period (Whitehouse 2001: 68).

Another exceptional glass find is a fragment of a shallow, colorless bowl (most probably a hemispherical bowl of Isings form 12; Isings 1957) with enameled décor, in this case part of a marine scene (BE25-171/020/014) [*Fig. 11*, bottom]. The decoration is very fragmentary, and the paint is peeling in places, but one can discern the large head and body of a fish and other unidentified sea creatures. The composition is painted in brown, green, pink, black, and yellow. Such motifs were not as common as polychrome scenes depicting vine and ivy leaves, vine tendrils, branches, and garlands inhabited by birds, apparently ducks. At least a sixth of the known examples of bowls with such decoration come from Egypt, including Quṣeir al-Qadīm (Meyer 1992: 38–39, Pl. 14: 341–346) and Karanis, Kharga Oasis, and Oxyrhynchus (Harden 1936: 100, 122, Pl. 14). Production of enameled glass, including blown hemispherical bowls, peaked in the Claudian–Neronian period and continued into Flavian times. This bowl also complements another similar find from the same area in Berenike, which was dated to the third quarter of the 1st century CE: a clear shallow bowl painted in polychrome with swimming fish, interspersed with vegetation and shells; the base has a broad circular band enclosing a dolphin facing right (Nicholson 2000). Similar marine scenes are also attested on some hemispherical cups from Winterthur (Vitudurum) and Vindonissa in Switzerland, and Xanten (Vetera/Colonia Ulpia Traiana) in Germany, all sites associated with the Roman *limes* in Europe (Rütti 1991: 129–130, Pl. XXXIIIb,

Fig. 24c). Recently, a complete cup in the shape of a male head with African features was published from Mangalia (ancient Callatis) on the Black Sea coast of Romania. It was found among the grave goods of a disturbed early Roman inhumation burial dated to the 1st century CE (Cliante and Țârlea 2025).




Fig. 12. Distribution of animal burials from the late cemetery phase. Color-coded wrappings: textiles – yellow; mats – brown. The human infant burial BE-161/165 is marked in purple. Inset photo: example of a cat burial with preserved textile wrappings; stamped handle (Inv. No. BE25-171/002/052) of a Dressel 2–4 amphora (Mapping and processing P. Osypiński)

A few small fragments of a document written on papyrus were also found and are currently under study by Rodney Ast and Julia Lougovaya.

A total of 43 individual animals plus one human infant were found buried in Trench BE-161. There is much less evident clustering than in the earlier phase, and the burials appear to be distributed fairly evenly over the whole surface, avoiding only the southern and particularly the southeastern part of the trench, where the construction layers (Loci 023=027) were still present on the surface [*Fig. 12*]. This pattern appears to continue in Trench BE-178, which yielded seven animal burials, including a double burial of a monkey and a cat. The burials in BE-171 were fewer and, as in the early phase, they likely indicate the northern outskirts of the burial ground. This distribution suggests a diminished interest in the parts of the cemetery farthest from the central stone enclosure, which had evidently become the focal point of the burial ground.

The pits for the animal burials in this phase were fairly shallow as a rule, and very few of them cut or even reached the construction-phase layers. Those in BE-178 appear to have been among the shallowest in this phase. However, a few deeper pits cut into the rubbish layer from this phase in Trench BE-171. Pit BE-171/003 was identified in the northwestern corner of the trench [see *Fig. 4*: northern and western baulks]. It measured roughly 1.50 m across. A complete skeleton of an adult bovine was laid out on its bottom at a depth of 0.50 m. As indicated by the damaged tips of the horn cores and the missing hind leg digits, the animal had been skinned before its body was deposited in the ground (Lasota-Moskalewska 1997). It lay on its right side, head to the east, with its nostrils pointing upward. The pit fill contained abundant waste, including animal bones with butchery marks. Another pit, BE-171/021, measured approximately 2 m × 2 m and was quite shallow (0.25 m deep). It contained three equid (donkey) skulls and two complete camel skulls, along with some camel mandibles. The treatment in this case was similar to that of the small animal burials, that is, the skeletal remains were covered with a pavement of fragmented pottery. One of the deepest burial pits was that of a young monkey (Locus BE-171/018).

The preservation of soft tissues, such as skin and fur, as well as textiles and mats used to wrap the animals' remains, is much better than that of finds from the first phase. The study of textile wrappings from BE-161 has identified mostly cotton and linen fragments, reused from clothing or sometimes furnishings; wool and goat-hair textiles are often recycled as padding. In numerous burial assemblages, cotton or linen strings are also present. Based on the example of a cat burial (Locus BE-161/004), one can assume that a string was attached to the animal's neck as a discrete yet distinctive sign of companionship. The monkey burials, which account for an exceptionally high proportion of the buried animals in this phase (more than 22%), were prepared with great care, involving deep burial pits and numerous grave furnishings, protected with a few layers of mats, potsherd paving, large marine shells, and stones (Osypińska, Osypiński, and Zych 2025). The perfect

preservation of the fur enabled some of the cats to be classified as a long-furred type, most probably imported from outside the Nile Valley and the Mediterranean region more generally.

The same general burial standards as those used for the small companion animals were followed for a human infant burial (Locus BE-161/165) [see *Fig. 12*]. The body was laid on its left side, head to the north, and covered with broken amphora sherds. The burial was not marked in any way, and the pit was no deeper than those of the animal burials in its vicinity.

### POST-ABANDONMENT PHASE

Successive layers of rubbish (Loci BE-161/002a, 002b) gradually leveled the uneven surface of the late cemetery phase. These yielded large fragments of letters written on papyrus, dated to the second half of the 1st century CE, which were most probably discarded at the close of the century or in the early 2nd century CE. The *terminus ante quem* is provided by an Egyptian amphora AE3b with a ribbed neck, dated from the Hadrianic period onward (Tomber 2007). There were no burials in these deposits, hence the assumption that they postdated the use of the cemetery in this area.

An erosional layer about 5 cm thick (Locus BE-161/001=BE-171/001=BE-178/001) covered the surface in all three trenches.

Rainwater surging downslope appears to have cut a small channel through the rubbish deposits. This shallow ditch runs north through Trenches BE-171 and BE-178 (Loci BE-171/003 and BE-178/008, 009). It was filled with pure sand and contained only a few redeposited artifacts, including matching fragments of pottery and glassware and an apparently dispersed shell deposit, and no animal burials. It is clearly not anthropogenic and has the same character as the erosional surface layer (Locus 001).

## DISCUSSION

Extending the fieldwork northward revealed the northern limits of the companion animal cemetery. In Trench BE-171, the burial density was clearly lower, and the archaeological features identified there were no longer directly associated with the custom of burying cats, dogs, and monkeys. The clay floor recorded in the northwestern corner of BE-161, continuing in the southeastern corner of BE-171, suggests the presence of a permanent, though not masonry-built, structure of some kind. It does not appear to have been a dwelling, as there are no internal divisions. Its location in the urban foreground of the harbor, where the caravan stop was likely located, suggests instead an office function related to trade activities. The presence of numerous ostraca and writing tools in the trash takes on new significance in this context, as does the abundant bronze coinage found in the rubbish layers.

The pit with camel skulls in BE-171, along with single skulls in similarly dated layers, can be interpreted as further evidence of activities connected with pack animals. In the Roman army, camels were highly prized animals (Toynbee 2013) assigned to the care of individual soldiers

(*dromedarii*, or army camel drivers, are mentioned in 1st-century CE letters; Rodney Ast, personal communication). Assuming that the deaths of animals would have had to be reported to superiors in order to manage replacements, the skulls collected in the deposit —incomplete because the mandibles were missing— might have served as a form of inventory check. They could have provided proof of how many animals had died in service over a given period.

The new field data, including pottery, clay oil lamps, personal dress accessories, and coins, have refined the dating of the construction of the stone enclosure, previously dated to around the mid-1st century CE on the basis of a tetradrachm of Caligula (37–38 CE) found in Trench BE-107 in 2015. It is now clear that the entire area of the animal cemetery was subject to extensive leveling as part of the new building project, which may have involved a small shrine or an altar within a small precinct. The combined evidence now places the *terminus post quem* for the beginning of this activity in the reign of Claudius or perhaps Nero.

The initiation of this building project is linked to two calf burials discovered in BE-161. Considering the high cost of transporting these animals from the Nile Valley and the absence of any marks indicating consumption on the bones, the animals can be treated as sacrificial offerings. The skeleton in Pit BE-171/023, which is stratigraphically associated with the cemetery's second phase (second half of the 1st century CE), is interpreted differently. The animal was most probably skinned, and the remains were not protected with potsherds. However, the skeleton is complete (barring the digits and horn sheaths) and should also be treated as a sacrificial or votive offering, presumably connected with a later phase of activity in this part of the site.

The 205 burials excavated in this stage of the project have augmented the dataset on companion animals from both phases of the Berenike cemetery. Several buried animals were furnished with accessories, including strings of beads, iron collars, and harness buckles made of wood or animal bone. Archaeozoological research revealed numerous pathologies, as well as non-skeletal evidence that has broadened our understanding of the health status and medical treatment of cats, dogs, and monkeys living in or passing through the harbor.

The monkey burials discovered in two of the currently excavated trenches have proved crucial to a better understanding of the significance of these animals. The high frequency of these burials and the archaeozoological identification of two species of monkeys from the Indian subcontinent, augmented by analyses of grave furnishings and burial form, have enabled further study of their special place in the urban community of 1st-century Berenike (Osypińska, Osypiński, and Zych 2025). Small monkeys were kept as companion animals in Roman society (Vespa 2022), their similarity to humans being recognized through a much stronger anthropomorphization of their nature than was the case with dogs and cats. They were represented in art, on mosaic floors and in small sculptures, as well as in terracotta figurines and scenes depicted on the discuses of clay oil lamps. Dead animals were sometimes buried

with the same care and attention afforded to human burials. They were treated as demi-gods, dressed in human apparel, and depicted imitating human entertainment. However, in the absence of close archaeological parallels or comparable evidence from Roman Egypt, it remains difficult to reconstruct the final destinations of the apparently well-organized trade in live monkeys imported from India, which appears to have operated throughout at least the 1st century CE.

The human infant burial (Locus BE-161/165) is not the first human burial in the area of the animal cemetery, among the companion animal graves, but it is unusual in this regard. The working theory is that it represents a case of irrational human behavior or, alternatively, the death of a child at a liminal stage in its short life, when it had yet to enter —or be excluded from— the culturally defined human community (cf. Power and Tristant 2016). In a certain sense, it belonged to the same social category as the companion animals.

Setting the northern limits of the burial ground enabled an estimate of its extent. The outermost graves discovered in Trench BE-171 are located about 20 m from the stone enclosure. On these grounds, the total area of the cemetery

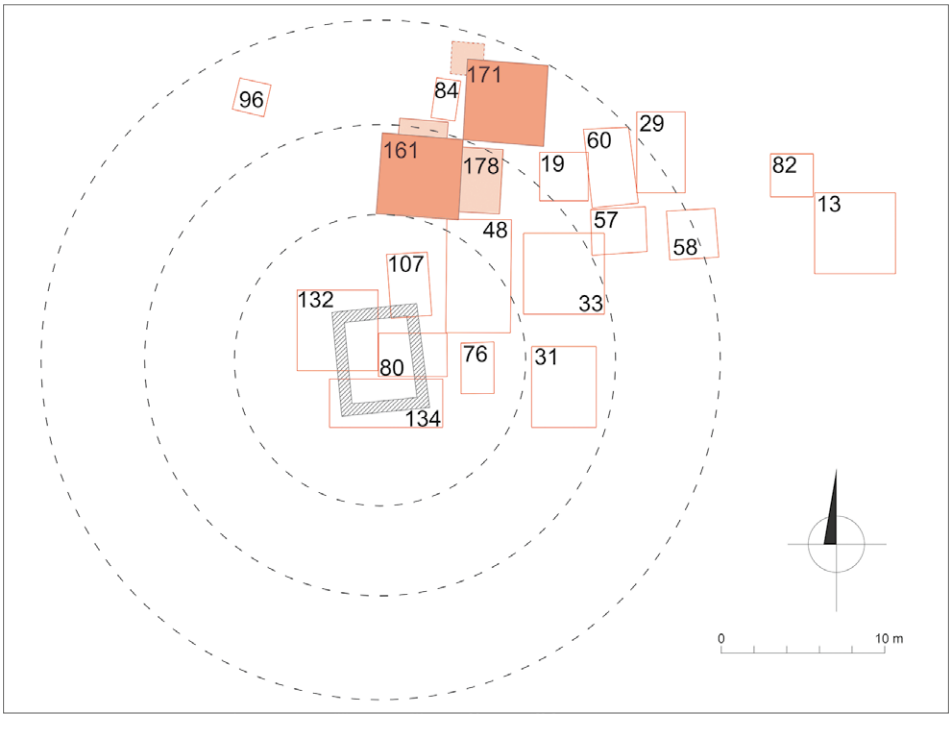


Fig. 13. Estimated extent of the animal cemetery in Berenike based on the results of the part excavated to date (trenches reported on in this text outlined in red). The three circumferential circles around the central enclosure represent the progressively reduced density of burials, taking into account their distance from the center. The outer circle shows the hypothetical maximum extent of the area covered by burial practices (Plan and processing S. Popławski)

in both phases can be estimated at about 1250 m², including the approximately 30 m² of the shrine *vel* altar precinct. This is, of course, assuming that the graves were evenly distributed in all directions, starting at the focal point of the central enclosure [*Fig. 13*]. Burials were initially concentrated almost exclusively along the outer walls of this enclosure. In time, they extended farther out, a few dozen meters away. Assuming, however, that the average density for the entire cemetery matches that for the 50 m² area of Trenches BE-161 and BE-171, that is, 143 burials in the first phase and 55 in the second, then the total number of burials is calculated as 3575 and 1375 individuals for the two phases, respectively. These estimates naturally do not take many factors into account, but even so, they go far toward indicating the size of the population of companion animals living in Berenike in the 1st century CE. Already, the approximately 800 burials recorded in the cemetery through 2025 have raised questions about the size of this category of animals in the resident community of Berenike. But if the longevity of the cemetery —at least a hundred years— is taken into account, the numbers become less improbable. It would amount to about 50 burials per year, also considering that many of the animals are very young cats, which display a very high mortality rate both historically and today (cf. Osypińska, Skibniewski, and Osypiński 2020).

Life in Berenike did not fade away in the later 2nd and 3rd centuries CE, and yet chrono-distinctive artifacts of this date are very rare in the cemetery area.

## RECAPITULATION

The objectives of the current project, aimed at establishing the northern boundaries of the cemetery of companion animals on the northern fringes of the Roman harbor town of Berenike, have been mostly achieved. Knowing the extent of the burial ground has increased the credibility of estimates of the size of the companion animal population and, more importantly, its species composition.

The presence of monkeys imported from India in numbers higher than anticipated based on earlier research has also highlighted the contribution that fieldwork in Berenike's animal cemetery can make to the discussion of transoceanic trade in live animals in antiquity (Osypińska, Osypiński, and Zych 2025).

Ongoing studies of the pottery assemblage, as well as other categories of material finds, including documentary evidence, have helped refine the chronological framework for the cemetery's use. It is currently considered that animal burials took place over a period of 100 years, from the second quarter of the 1st century CE through to the beginning of the 2nd century CE.

The next stage of the investigations, which will cover the southern part of the cemetery in the immediate vicinity of the presumed entrance to the central masonry enclosure, which dates to the 60s CE, will undoubtedly add to the picture of one of the most unique features of this early Roman port hub on the Red Sea coast of Egypt.

**Dr. Piotr Osypiński**
https://orcid.org/0000-0001-7843-224X
Polish Academy of Sciences
Institute of Archaeology and Ethnology
p.osypinski@iaepan.edu.pl

**Prof. Dr. hab. Marta Osypińska**
https://orcid.org/0000-0003-4603-9245
University of Wrocław
Institute of Archaeology
marta.osypinska@uwr.edu.pl

**Iwona Zych**
https://orcid.org/0000-0002-5341-6654
Independent researcher
i.zych@uw.edu.pl

**Dr. Szymon Popławski**
https://orcid.org/0000-0002-0208-1903
Vienna University of Technology
Faculty of Architecture and Planning
Institute of History of Art
szymon.poplawski@wp.pl

**Dr. Katarzyna de Lellis-Danys**
https://orcid.org/0000-0002-9192-2857
University of Warsaw
Polish Centre of Mediterranean Archaeology;
National Museum in Warsaw
k.danys.erc@uw.edu.pl

**Renata Kucharczyk**
https://orcid.org/0000-0003-0294-8500
Independent researcher
renatalex@yahoo.com

**Dr. Magdalena Woźniak-Eusèbe**
https://orcid.org/0000-0003-3551-2762
University of Warsaw
Polish Centre of Mediterranean Archaeology
m.m.wozniak@uw.edu.pl

**How to cite this article:** Osypiński, P., Osypińska, M., Zych, I., Popławski, S., de Lellis-Danys, K., Kucharczyk, R., Woźniak-Eusèbe, M. (2026). The early Roman animal cemetery in Berenike (Red Sea, Egypt): estimating its range (fieldwork in 2023–2025). *Polish Archaeology in the Mediterranean,* 35.1, 415–444. https://doi.org/ 10.37343/uw.2083-537X.pam35.1.10

## References

Bailey, D.M. (1980). *Catalogue of the lamps in the British Museum* II. *Roman lamps made in Italy*. London: British Museum Publications

Bailey, D.M. (1988). *Catalogue of the lamps in the British Museum* III. *Roman provincial lamps*. London: British Museum Publications

Chrzanovski, L. (2019). *Lampes antiques, byzantines et islamiques du Nil à l'Oronte. La Collection Bouvier*. Warsaw: PCMA UW; University of Warsaw Press

Cliante, L. and Ţârlea, A. (2025). The early Roman glass head-shaped cup from Callatis (Romania): A reassessment. *Peuce (Serie Nouă)*, 23, 61–86

Ettlinger, E., Hedinger, B., Hoffmann, B., Kenrick, P.M., Pucci, G., Roth-Rubi, K., Schneider, G., von Schnurbein, S., Wells, C.M., and Zabehlicky-Scheffenegger, S. (1990). *Conspectus formarum terrae sigillatae Italico modo confectae* (=*Materialien zur Römisch-Germanischen Keramik* 10). Bonn: Habelt

Gwiazda, M., Zych, I., and Smagur, E. (2025). Different structures, uniform tradition: the burial landscape in the post-Roman Eastern Desert trade town of Berenike. *Journal of African Archaeology*. https://doi.org/10.1163/21915784-bja10046

Harden, D.B. (1936). *Roman glass from Karanis found by the University of Michigan Archaeological Expedition in Egypt, 1924–29*. Ann Arbor, MI: University of Michigan Press

Isings, C. (1957). *Roman glass from dated finds* (=*Archaeologica Traiectina* 2). Groningen: J.B. Wolters

Knowles, K. (2006). The pottery lamps. In V.A. Maxfield and D.P.S. Peacock (eds), *Mons Claudianus: Survey and excavation, 1987–1993*, III. *Ceramic vessels and related objects* (=*Fouilles de l'Institut Français d'Archéologie Orientale du Caire* 54) (pp. 309–426). Cairo: Institut français d'archéologie orientale

Lasota-Moskalewska, A. (1997). *Podstawy archeozoologii: szczątki ssaków* (Principles of archaeozoology: Mammalian remains). Warsaw: Wydawnictwo Naukowe PWN

Manacorda, D. (2007). "Ex figlinis Caesaris". In D. Pupillo (ed.), *Le proprietà imperiali nell'Italia romana: economia, produzione, amministrazione. Atti del Convegno Ferrara-Voghiera 3–4 giugno 2005* (pp. 269–291). Florence: Le Lettere

Meyer, C. (1992). *Glass from Quseir al-Qadim and the Indian Ocean trade* (=*Studies in Ancient Oriental Civilization* 53). Chicago: Oriental Institute of the University of Chicago

Młynarczyk, J. (1998). Terracotta mould-made lamps in Alexandria. Hellenistic to late Roman period. In J.-Y. Empereur (ed.), *Commerce et artisanat dans l'Alexandrie hellénistique et romaine. Actes du Colloque d'Athènes organisé par le CNRS, le Laboratoire de céramologie de Lyon et l'École française d'Athènes, 11–12 décembre 1988* (=*BCH Supplément* 33) (pp. 327–352). Athens: École française d'Athènes

Nicholson, P.T. (2000). Roman glass from Berenike (Egypt): some new work. In *Annales du 14ᵉ congrès de l'Association internationale pour l'histoire du verre: Italia/Venezia-Milano 1998* (pp. 151–155). Lochem: AIHV

Osypińska, M. and Osypiński, P. (2017). New evidence for the emergence of a human-pet relation in early Roman Berenike (1st–2nd century AD). In I. Zych (ed.), *Research on the Red Sea* (=*Polish Archaeology in the Mediterranean* 26/2) (pp. 167–192). Warsaw: University of Warsaw Press

Osypińska, M., Osypiński, P., and Zych, I. (2025). A centurion's monkey? Companion animals for the social elite in an Egyptian port on the fringes of the Roman Empire in the 1st and 2nd c. CE. *Journal of Roman Archaeology*, 38(2), 593–609. https://doi.org/10.1017/S1047759425100445

Osypińska, M., Skibniewski, M., and Osypiński, P. (2020). Ancient pets. The health, diet and diversity of cats, dogs and monkeys from the Red Sea port of Berenice (Egypt) in the 1st–2nd centuries AD. *World Archaeology*, 52(4), 639–653. https://doi.org/10.1080/00438243.2020.1870545

Osypiński, P. and Osypińska, M. (2019). Excavation of the small animal cemetery at the Roman Red Sea harbor of Berenike in 2018 and 2019. *Polish Archaeology in the Mediterranean*, 28/2, 175–193

Osypiński, P., Osypińska, M., Zych, I., Braulińska, K., and Hussein, M.S. (2025). A Roman fibula from a transcontinental port on the fringes of the Empire. *Antiquity*, 99(408), e59. https://doi.org/10.15184/aqy.2025.10155

Osypiński, P., Osypińska, M., Zych, I., Sidebotham, S., Carannante, A., Domżalski, K., Mandera, S., Popławski, S., and Kucharczyk, R. (2024). Animal cemetery and caravan stop—Investigating suburban space in a transcontinental port in Berenike (Red Sea, Egypt). *Journal of Archaeological Science: Reports*, 59, 104779. https://doi.org/10.1016/j.jasrep.2024.104779

Popławski, S., Kraśniewska, U., Mi, F., and Oleksiak, J. (2021). Trash from a temple: A deposit next to the Isis Temple at Berenike (Egypt). *Polish Archaeology in the Mediterranean*, 30/2, 387–418

Power, R.K. and Tristant, Y. (2016). From refuse to rebirth: Repositioning the pot burial in the Egyptian archaeological record. *Antiquity*, 90(354), 1474–1488

Rütti, B. (1991). *Die römischen Gläser aus Augst und Kaiseraugst* (=*Forschungen in Augst* 13). Augst: Römermuseum

Sidebotham, S.E. (2011). *Berenike and the ancient maritime Spice Route*. Berkeley: University of California Press

Sidebotham, S.E., Ast, R., Kaper, O.E., Bergmann, M., Woźniak, M.A., Rądkowska, J.K., Bajtler, M., Popławski, S., Rice, S., Geerts, R.C.A., Bartos, N., Kucharczyk, R., Osypiński, P., Osypińska, M., Viji, K., Zych, I., and Hussein, M.S. (2025). Results of the winter 2024 excavation season at Berenike (Red Sea coast), Egypt. *Thetis*, 29, 15–26

Sidebotham, S.E. and Zych, I. (eds). (2011). *Berenike 2008–2009: Report on the excavations at Berenike, including a survey in the Eastern Desert* (=*PCMA Excavation Series* 1). Warsaw: PCMA

Sidebotham, S.E. and Zych, I. (eds). (2017). *Berenike 2010–2011. Report on two seasons of excavations at Berenike, including survey in the Eastern Desert and reports on earlier work* (=*PCMA Excavation Series* 4). Warsaw: PCMA

Sidebotham, S.E., Zych, I., Ast, R., Kaper, O.E., Bergmann, M., Carannante, A., Osypińska, M., Harrell, J.A., Kucharczyk, R., Tomber, R.S., and Soriga, E. (2021). Results of the winter 2020 excavation season at Berenike (Red Sea coast), Egypt. *Thetis*, 26, 13–49

Sidebotham, S.E., Zych, I., Hense, M., Ast, R., Kaper, O.E., Bergmann, M., Osypińska, M., and Carannante, A. (2019). Results of the winter 2018 excavation season at Berenike (Red Sea coast), Egypt. The Belzoni bicentennial report. *Thetis*, 24, 7–19

Tomber, R. (2006). The pottery. In V.A. Maxfield and D.P.S. Peacock (eds), *Mons Claudianus: Survey and excavation, 1987–1993*, III. *Ceramic vessels and related objects* (=*Fouilles de l'Institut Français d'Archéologie Orientale du Caire* 54) (pp. 3–218). Cairo: Institut français d'archéologie orientale

Tomber, R. (2007). Early Roman Egyptian amphorae from the Eastern Desert of Egypt: A chronological sequence. In S. Marchand and A. Marangou (eds), *Amphores d'Égypte de la Basse Époque à l'époque arabe* I (=*Cahiers de la Céramique Egyptienne* 8/1) (pp. 525–536). Cairo: Institut français d'archéologie orientale

Tomber, R. (2012). From the Roman Red Sea to beyond the Empire: Egyptian ports and their trading partners. *British Museum Studies in Ancient Egypt and Sudan*, 18, 201–215

Toynbee, J.M.C. (2013). *Animals in Roman life and art*. Barnsley: Pen & Sword Archaeology

Vespa, M. (2022). The place of nonhuman primates in ancient Roman culture: Narratives and practices. In B. Urbani, D. Youlatos, and A.T. Antczak (eds), *World archaeoprimatology: Interconnections of humans and nonhuman primates in the past* (pp. 201–224). Cambridge: Cambridge University Press

Wheeler, R.E.M., Ghosh, A., and Deva, K. (1946). Arikamedu, an Indo-Roman trading-station on the east coast of India. *Ancient India*, 2, 17–124

Whitehouse, D. (2001). *Roman glass in the Corning Museum of Glass* II. Corning: Corning Museum of Glass

Zych, I., Sidebotham, S.E., Hense, M., Rądkowska, J.K., and Woźniak, M. (2016). Archaeological fieldwork in Berenike in 2014 and 2015: From Hellenistic rock-cut installations to abandoned temple ruins. *Polish Archaeology in the Mediterranean*, 25, 315–348